Contents

Select Language

Powered by Google Translate

Roof Kit

P/N 2882911; 2882912; 2882913; 2890684

Before You Begin

Before beginning assembly, inspect the kit and its component(s) to be sure all parts and tools are accounted for and not damaged. If missing parts or parts are damaged, please contact your Selling Dealer for assistance.

If your accessory was purchased online, please contact POLARIS customer service at **1-800-POLARIS** (US & Canada only).

Application

Verify accessory fitment at www.polaris.com.

Kit Contents

NOTICE

Premium Roof Kits P/N 2882912, P/N 2882913, and P/N 2890684 also contain parts for the installation of the roof liners.

Roof Kit P/N 2882911

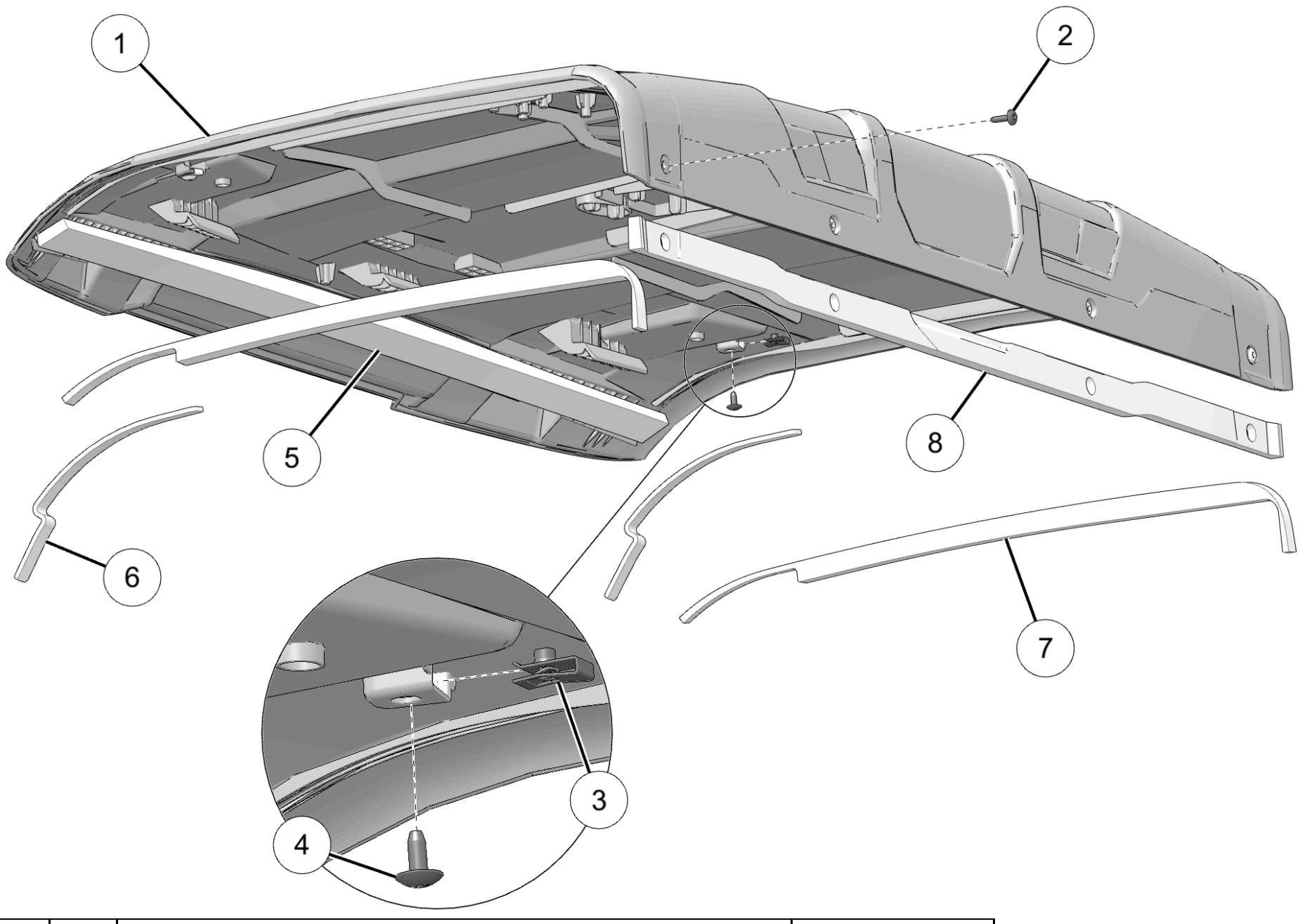

Ref	Qty	Part Description	P/N Available Separately
1	1	Roof Panel, Poly, 3-Passenger	n/a
2	4	Screw, Torx® Head, (M6 x 1.0 x 25 mm)	7519650

Ref	Qty	Part Description	P/N Available Separately
3	2	U-nut Clip	7081305
4	2	Screw, Torx® Head, (M6 x 1.0 x 15 mm)	7519092
5	1	Roof Foam Seal, Front	5814649
6	2	ROPS Foam Seal	5814651
7	2	Roof Foam Seal, Side	5813845
8	1	Roof Foam Seal, Rear	5813846

Roof and Roof Liner Kit P/N 2882912; 2882913; 2890684

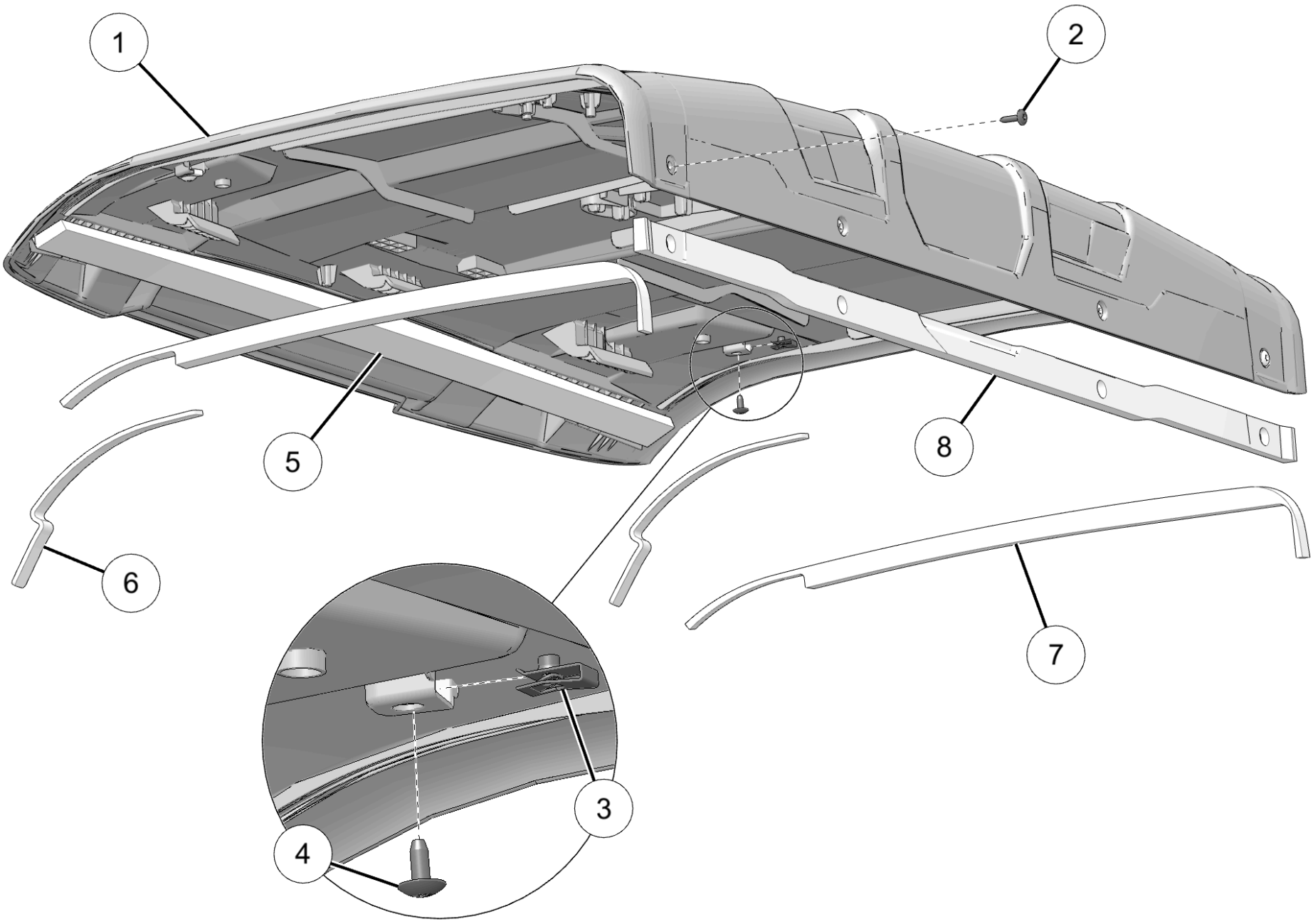

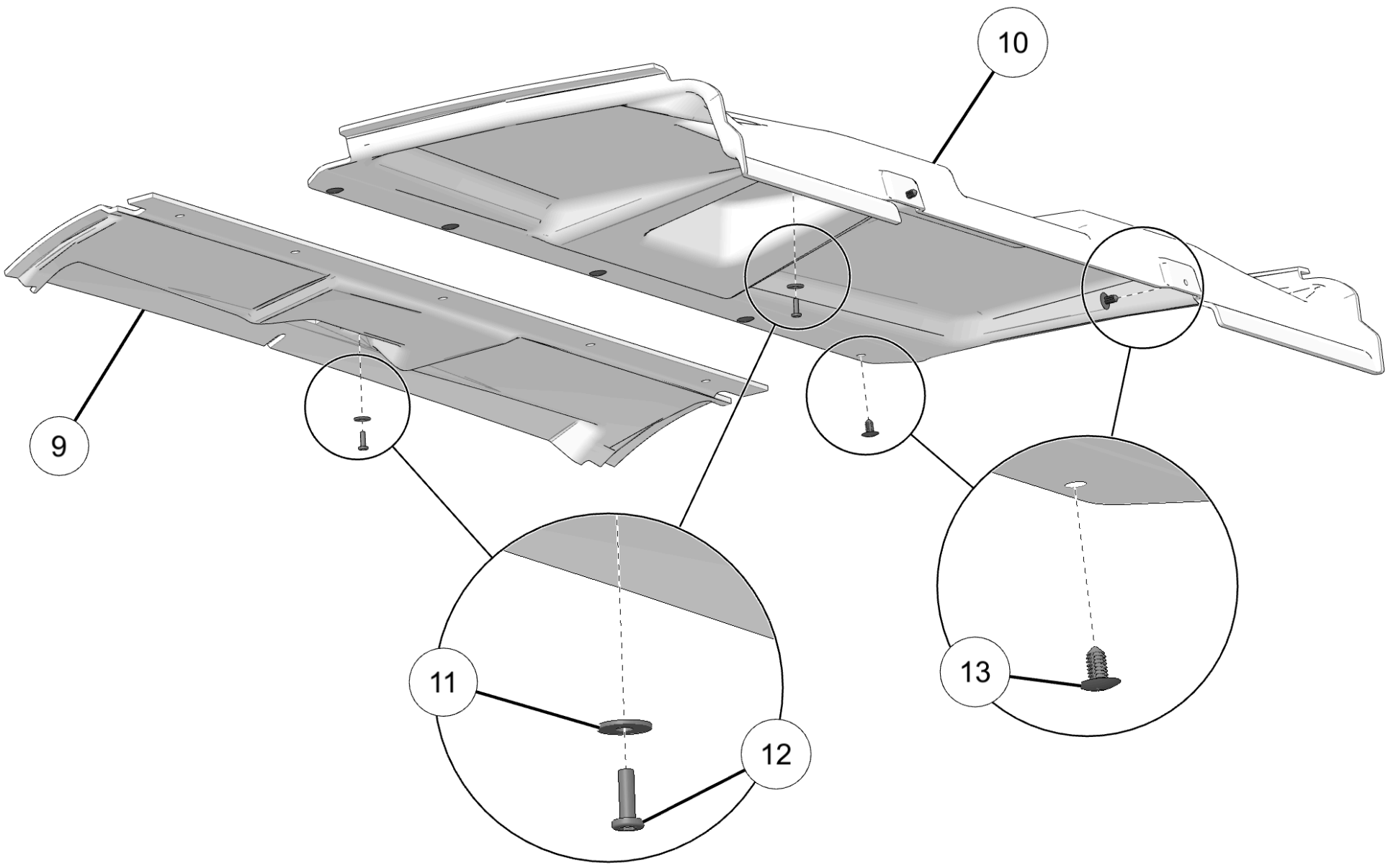

Ref	Qty	Part Description	P/N Available Separately	Available Service Kit
1	1	Roof Panel, Poly, 3-Passenger	n/a	n/a
2	4	Screw, Torx® Head, (M6 x 1.0 x 25 mm)	7519650	2207264

Ref	Qty	Part Description	P/N Available Separately	Available Service Kit
3	2	U-nut Clip	7081305	2207264
4	2	Screw, Torx® Head, (M6 x 1.0 x 15 mm)	7519092	2207264
5	1	Roof Foam Seal, Front	5814649	n/a
6	2	ROPS Foam Seal	5814651	n/a
7	2	Roof Foam Seal, Side	5813845	n/a
8	1	Roof Foam Seal, Rear	5813846	n/a
9	1	Roof Liner, Front (Kit P/N 2882912 and P/N 2882913 only) Roof Liner, Front (Kit P/N 2890684 only)	5814646 5814774	n/a n/a
10	1	Roof Liner, Rear (Kit P/N 2882912 and P/N 2882913 only) Roof Liner, Rear (Kit P/N 2890684 only)	5814714 5815629	n/a n/a
11	4 2	Washer, (.20 x .67 x 0.048 mm) (Kit P/N 2882912 and P/N 2882913; Front and Rear Liner Hardware) (Kit P/N 2890684; Rear Liner Hardware Only) Washer, (.28 x .62 x .14 mm) (Kit P/N 2890684 only; Front Liner Hardware)	7556034 7555748	2207264 n/a
12	4 2	Screw, Torx® Pan Head, High/Low - #10 x 5/8 (Kit P/N 2882912 and Kit P/N 2882913; Front and Rear Liner Hardware) (Kit P/N 2890684; Rear Liner Hardware Only) Screw, Torx® Pan Head, High/Low - #14 x 1 (Kit P/N 2890684; Front Liner Hardware)	7518238 7518158	2207264 n/a
13	7	Push Dart	7670088	2207264
14	1	Decal, "Be Prepared/Drive Responsibly" (not shown)	7187261	n/a
15	1	Decal, "Require Proper Use/Do Your Part" (not shown)	7187260	n/a
16	1	Decal, "Payload" (not shown)	7187264	n/a

Tools Required

- Safety Glasses
- Cutting Tool
- Screwdriver Set, Torx®
- Socket Set, Torx® Bit
- Torque Wrench

Consumables Required

- Cloth, Non-Abrasive, Lint-Free
- Gloves, Chemical Resistant
- Isopropyl Alcohol (IPA)

Important

Your Roof Kit is exclusively designed for your vehicle. Please read the installation instructions completely before beginning. Installation is simpler if the vehicle is clean and free of debris. For your safety, and to make sure an acceptable installation, do all installation steps correctly in the sequence shown.

Installation Instructions

Vehicle Preparation

General

1. Park vehicle on a flat surface.
2. Shift vehicle into PARK.
3. Turn key to OFF position and remove key.

⚠ WARNING

If transporting vehicle in non-enclosed trailer then vehicle must FACE FORWARD, or roof must be removed.

Failure to comply may allow airflow, vibration, or other factors to separate roof from vehicle and cause an accident, resulting in serious personal injury or death.

ROPS Seals Installation

1. Clean upper surface of ROPS visor with isopropyl alcohol.

NOTICE

Make sure to clean upper ROPS visor for good seal adhesion.

⚠ WARNING

Isopropyl alcohol is hazardous to your health. See isopropyl alcohol packaging for proper handling instructions, including recommended personal protective equipment such as goggles and chemical resistant gloves.

2. Remove adhesive backing from ROPS seal (6), then apply seal to outboard edge of ROPS visor (A). Push seal firmly into place. Repeat for opposite side.

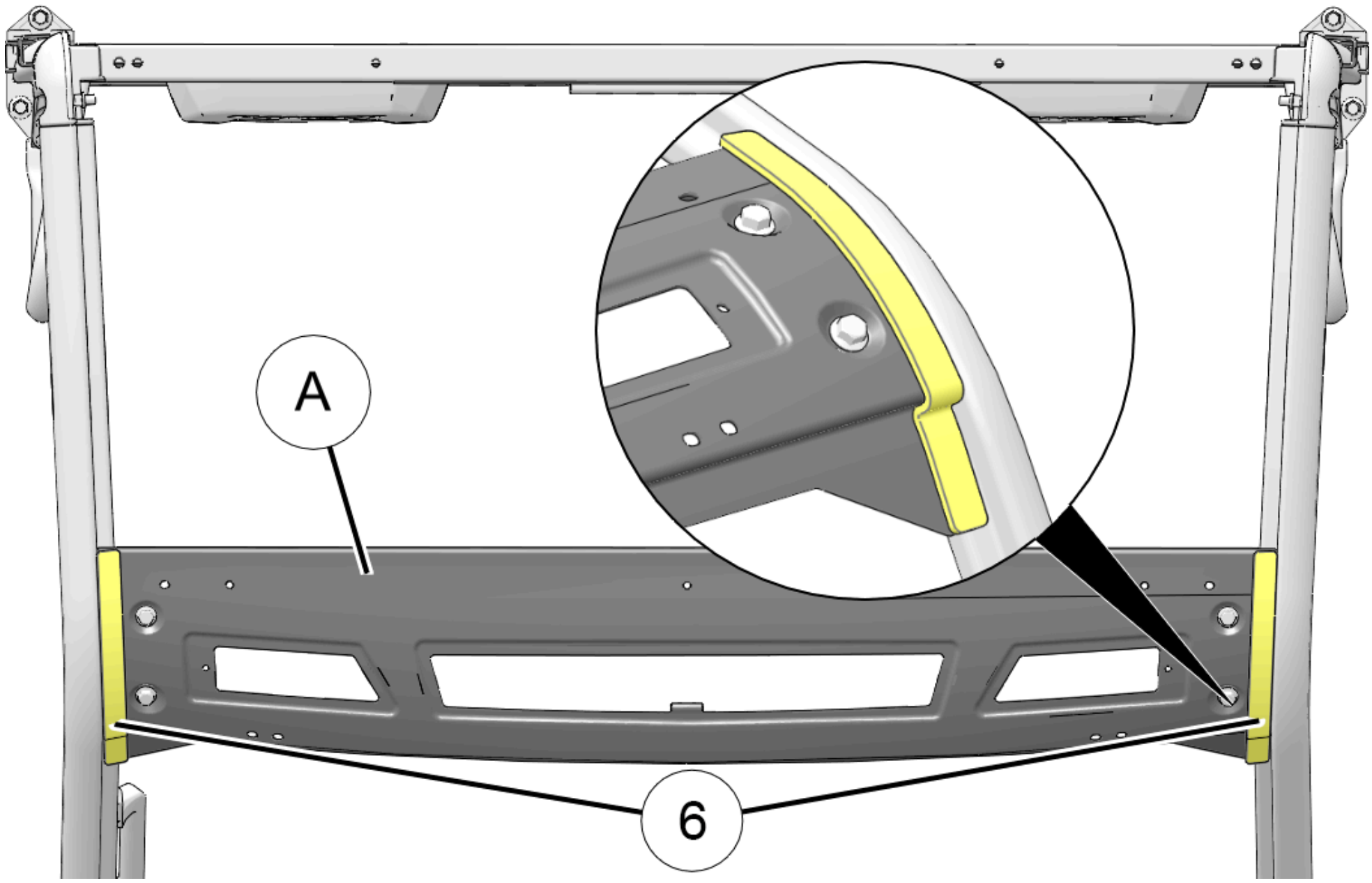

Roof Seals Installation

1. Set roof panel upside down on protective surface.

2. Clean perimeter of roof panel interior surface with isopropyl alcohol.

NOTICE

Specific locations shown in subsequent figures.

NOTICE

Make sure to clean interior roof panel surfaces for good seal adhesion.

⚠ WARNING

Isopropyl alcohol is hazardous to your health. See isopropyl alcohol packaging for proper handling instructions, including recommended personal protective equipment such as goggles and chemical resistant gloves.

3. Remove adhesive backing from front seal (5), then apply seal to front of roof panel. Push seal firmly into place.

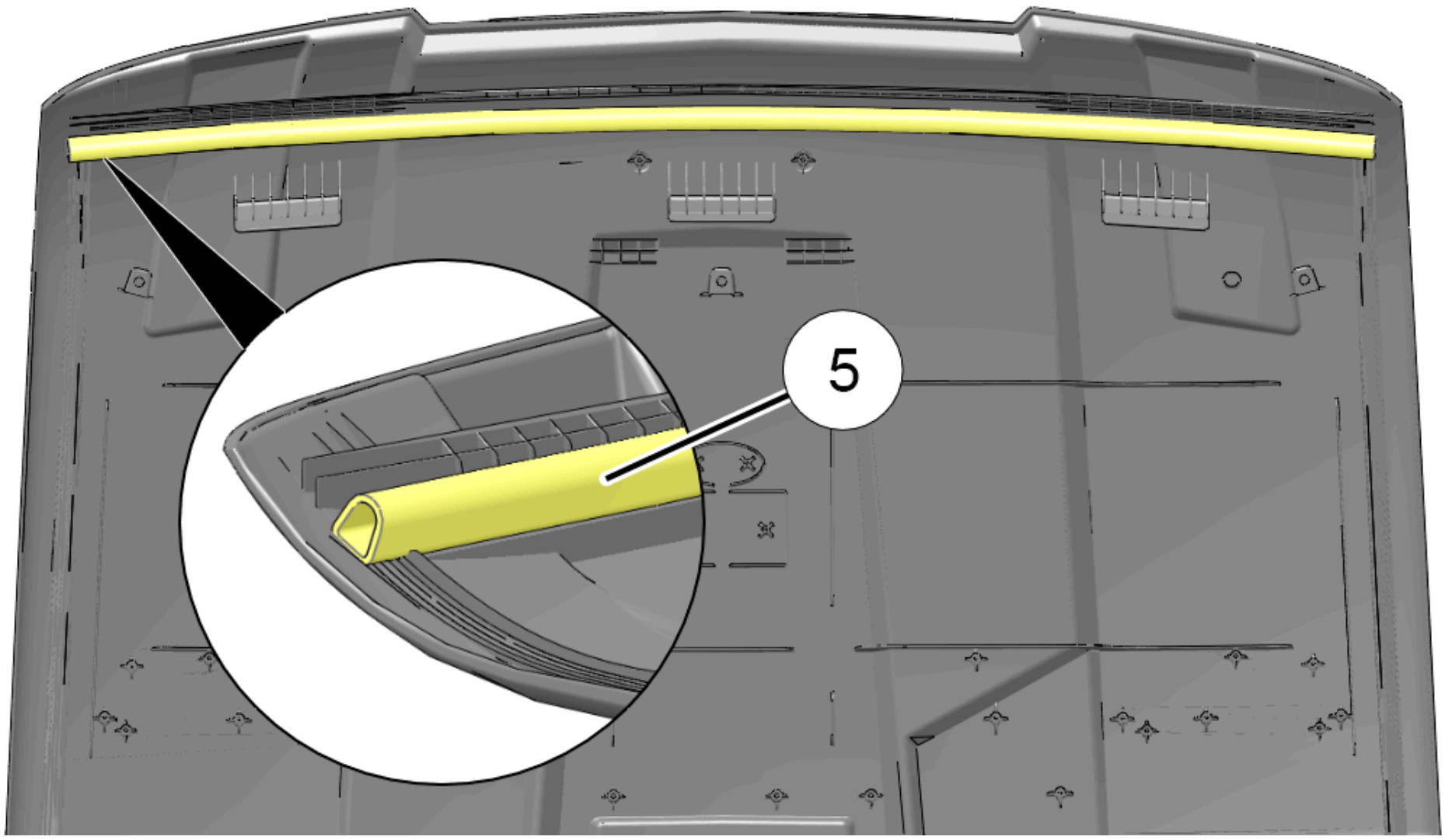

4. Remove adhesive backing from rear seal (8), then apply seal to rear edge of roof panel, aligning punched holes in seal with fastener standoffs in panel. Push seal firmly into place.

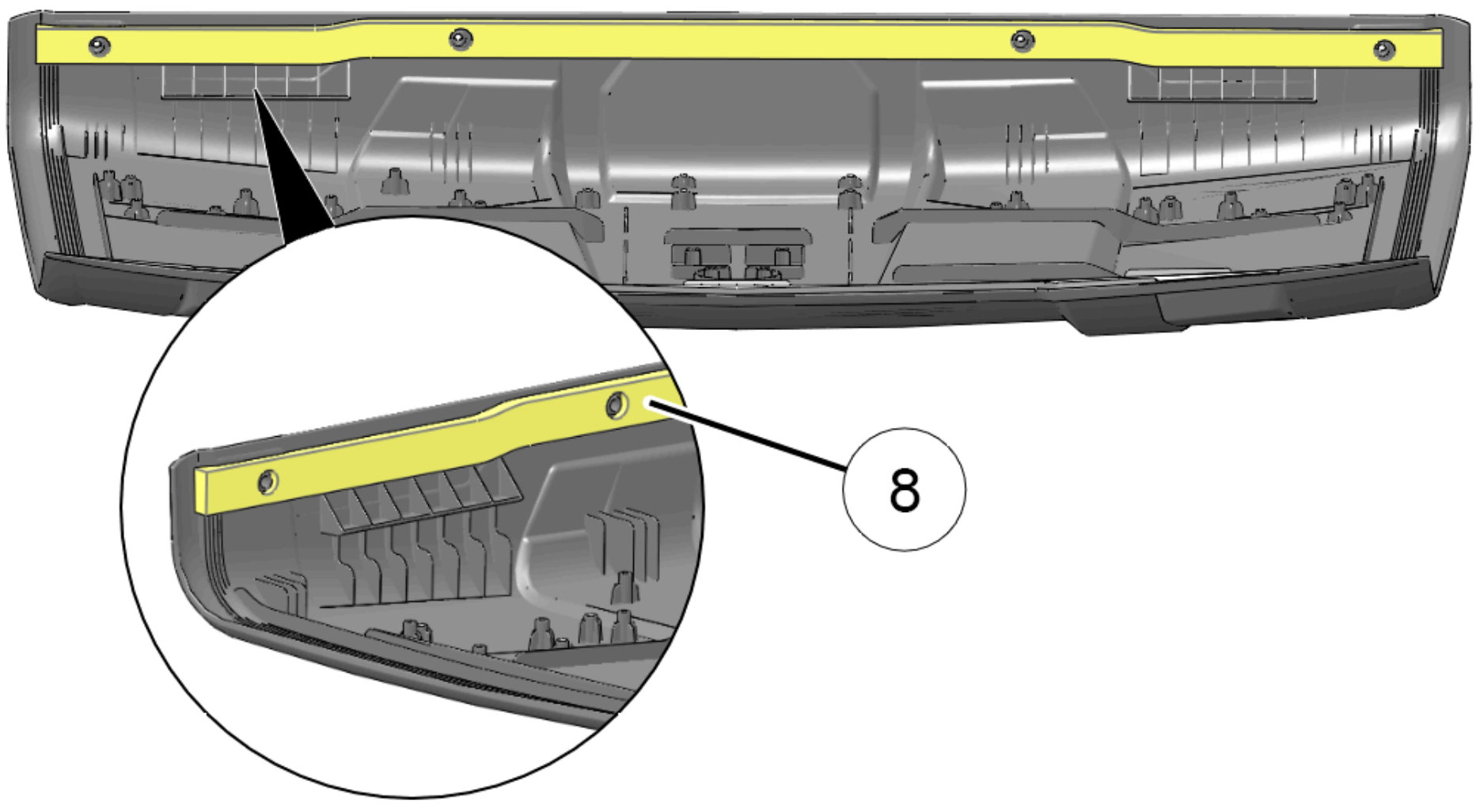

5. Remove adhesive backing from side seal (7), then apply seal to roof panel on outboard side of channel wall (B). Trim side seal as needed to fit between front seal (5) and rear seal (8). Push seal firmly into place. Repeat for opposite side.

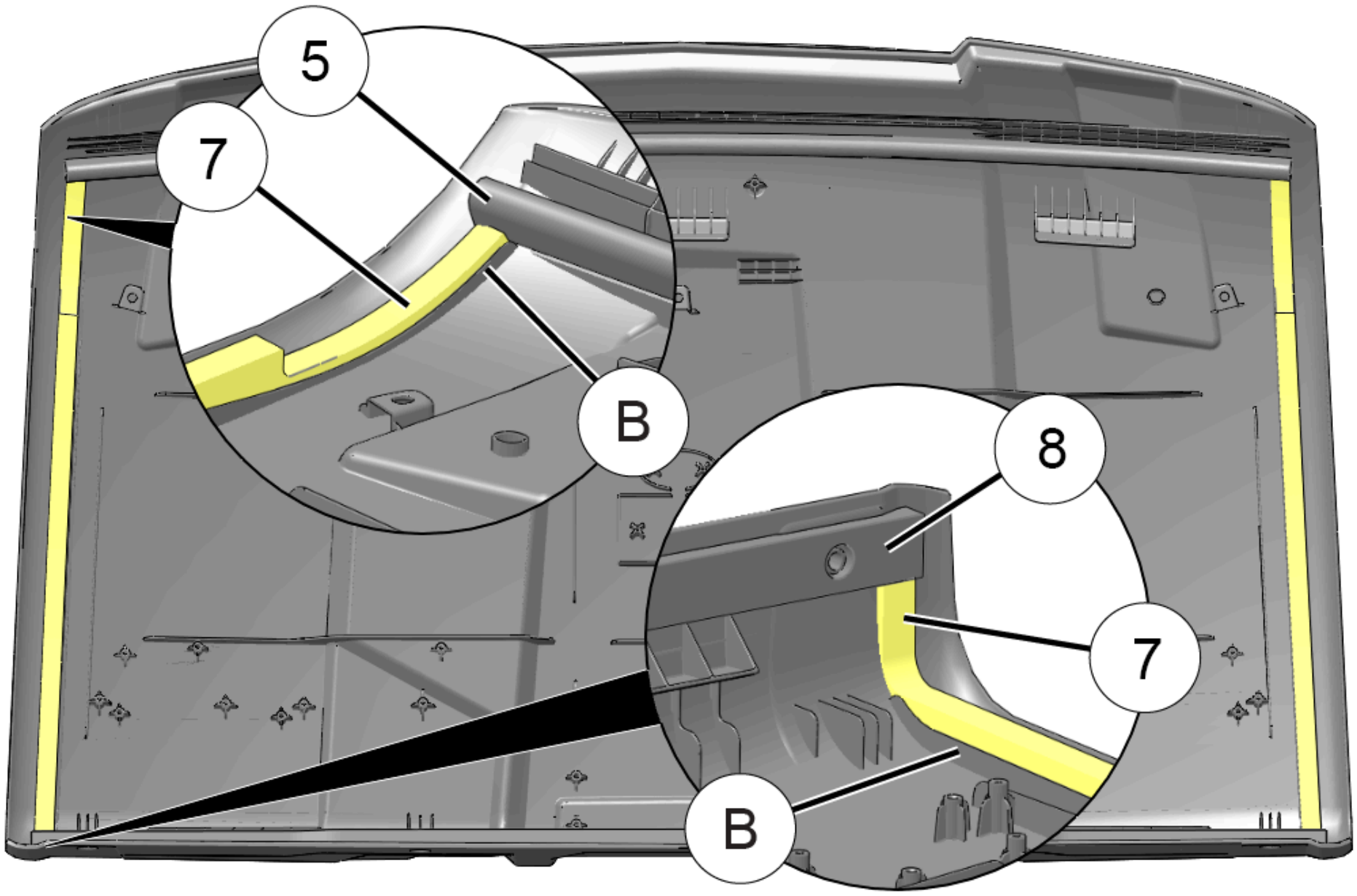

Roof Preparation

1. Install two clip nuts (3) to standoffs at front of roof panel (1). Make sure threaded portion of clip nut is located INSIDE standoff.

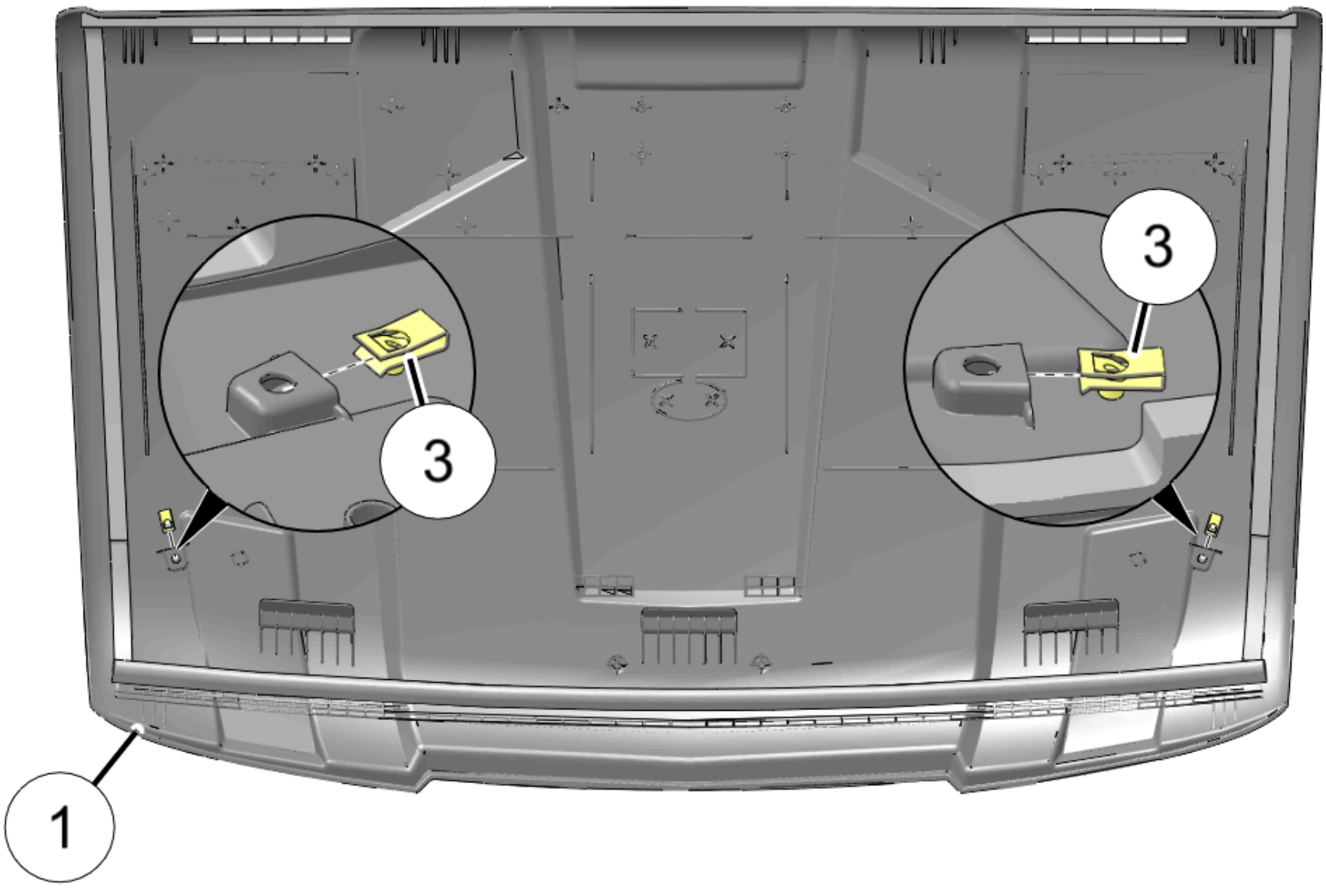

Roof Installation

1. Put roof panel on top of ROPS, installing three hooks (C) through openings in front ROPS visor.

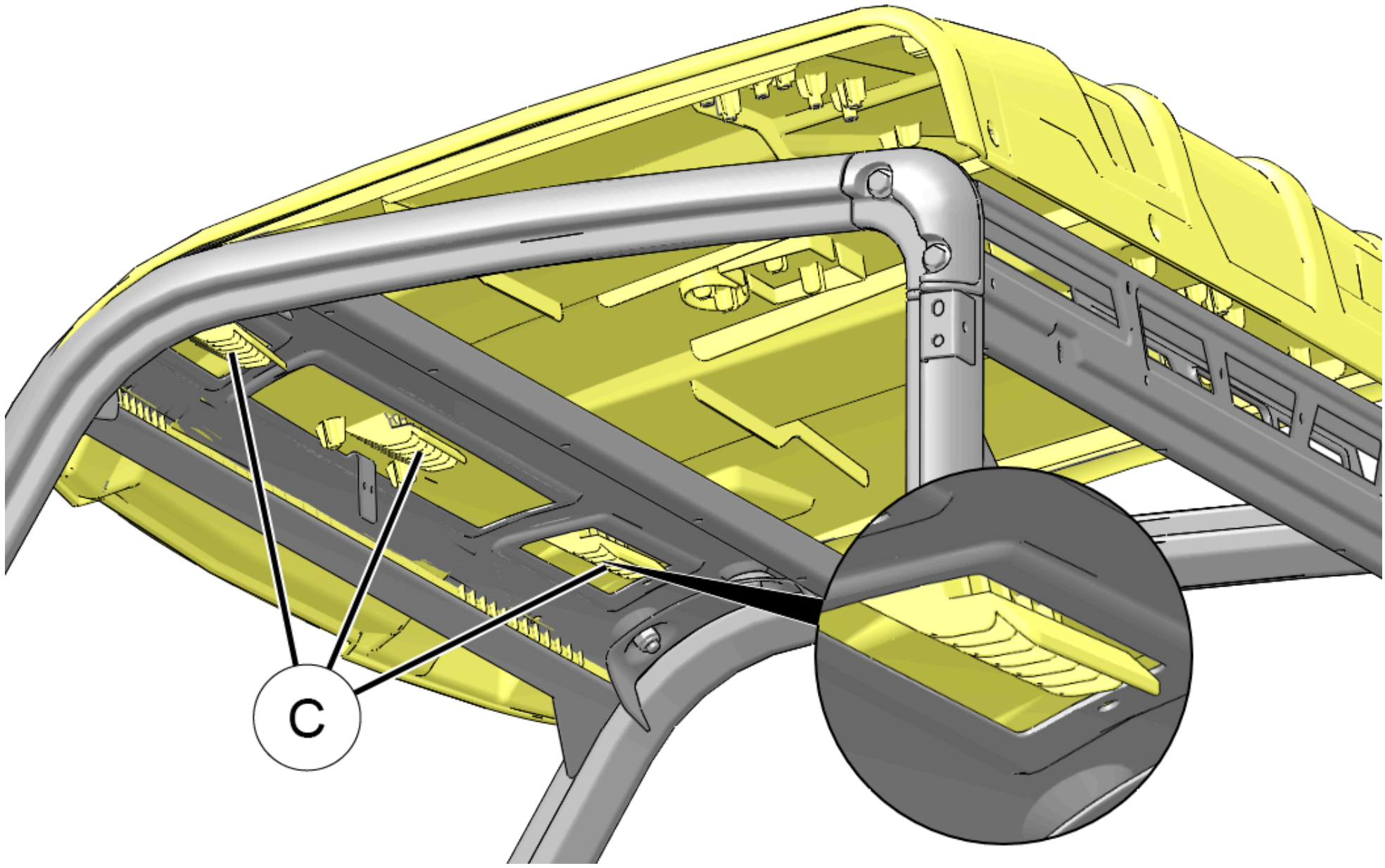

2. Move roof panel rearward until hooks (C) lock into front ROPS visor, then push rear of roof panel down until two tabs (D) snap into B-pillar cross-member.

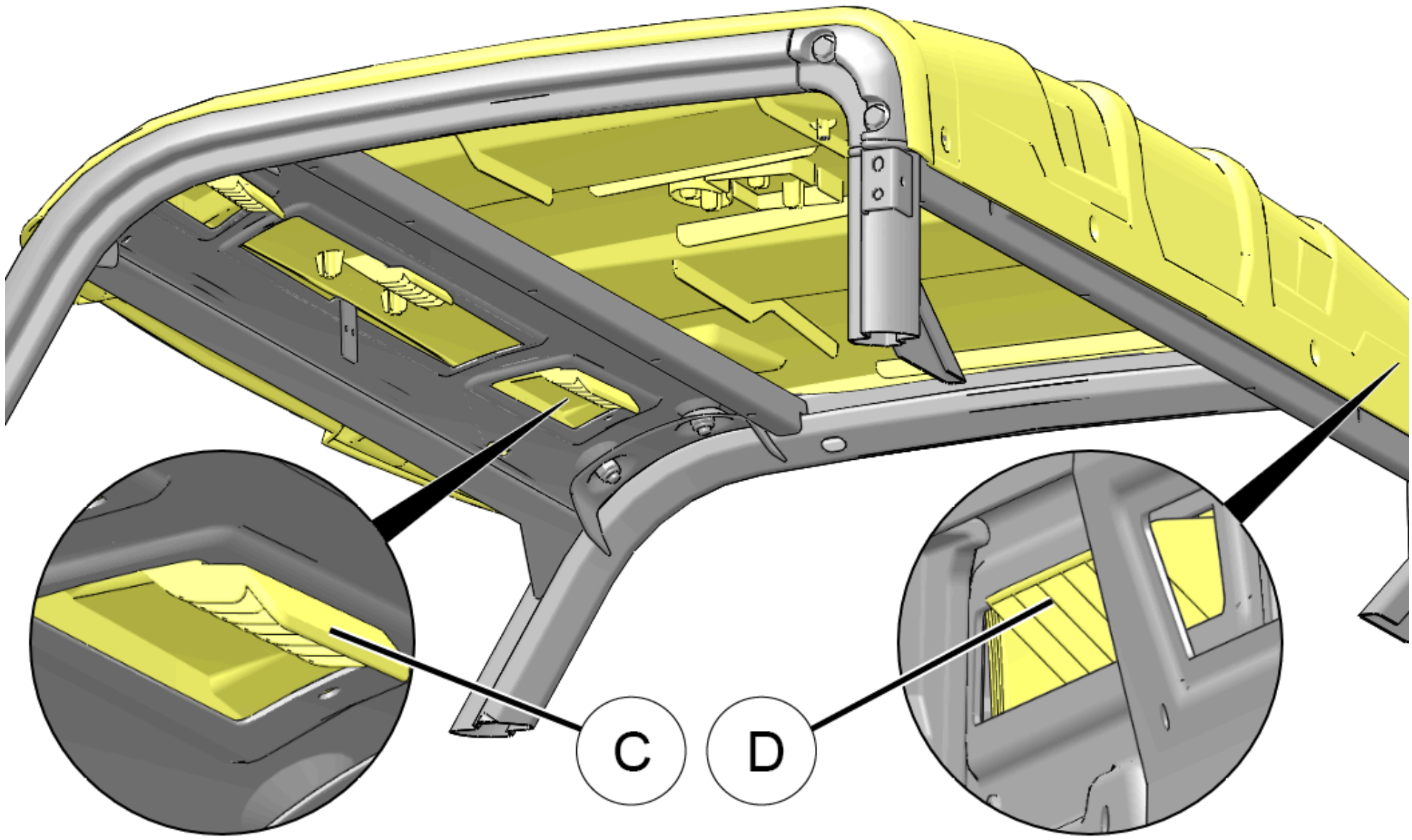

3. Attach front right corner of roof panel to ROPS using screw (4). Repeat for front left corner.

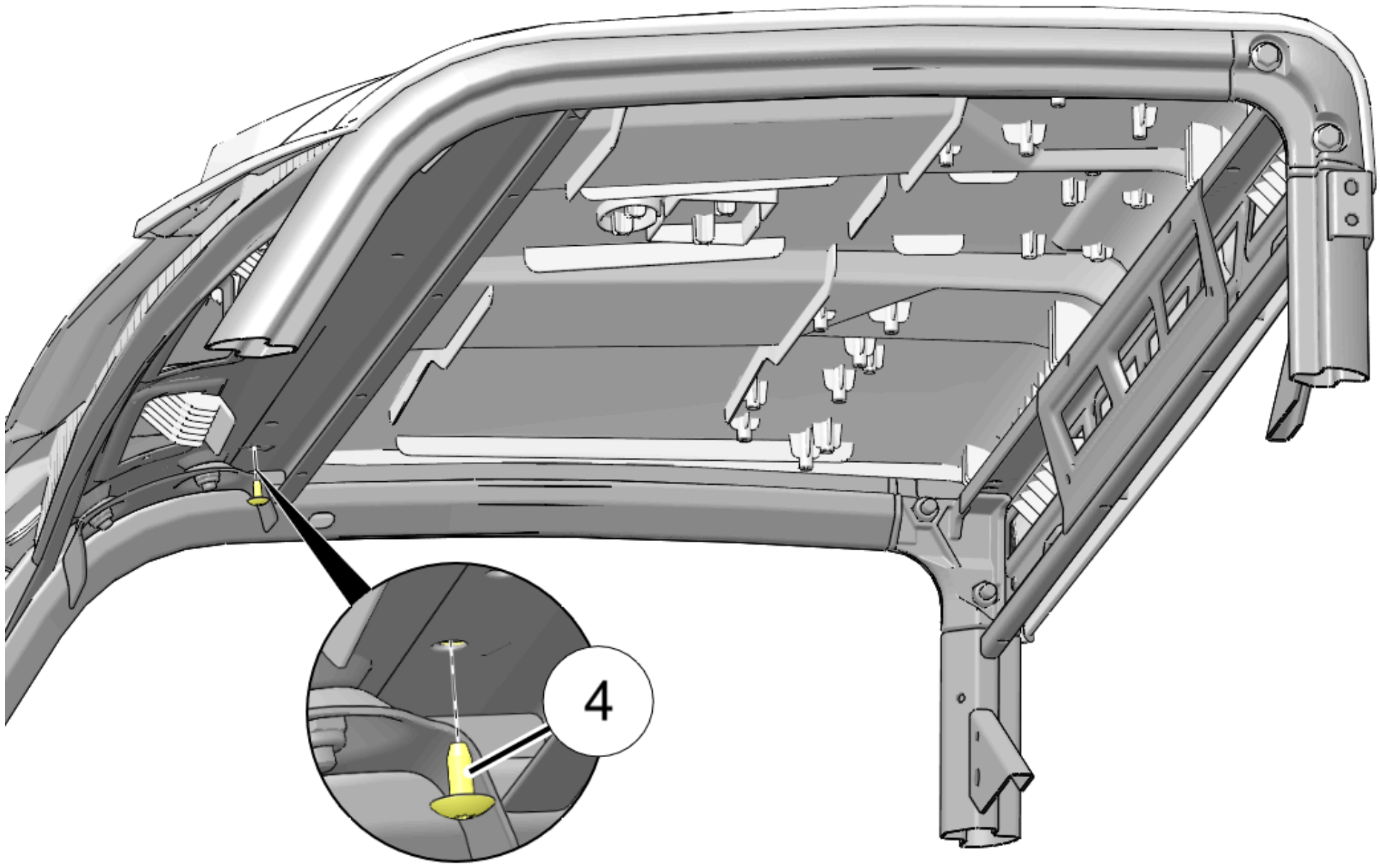

4. Attach rear edge of roof panel to ROPS using four screws (2).

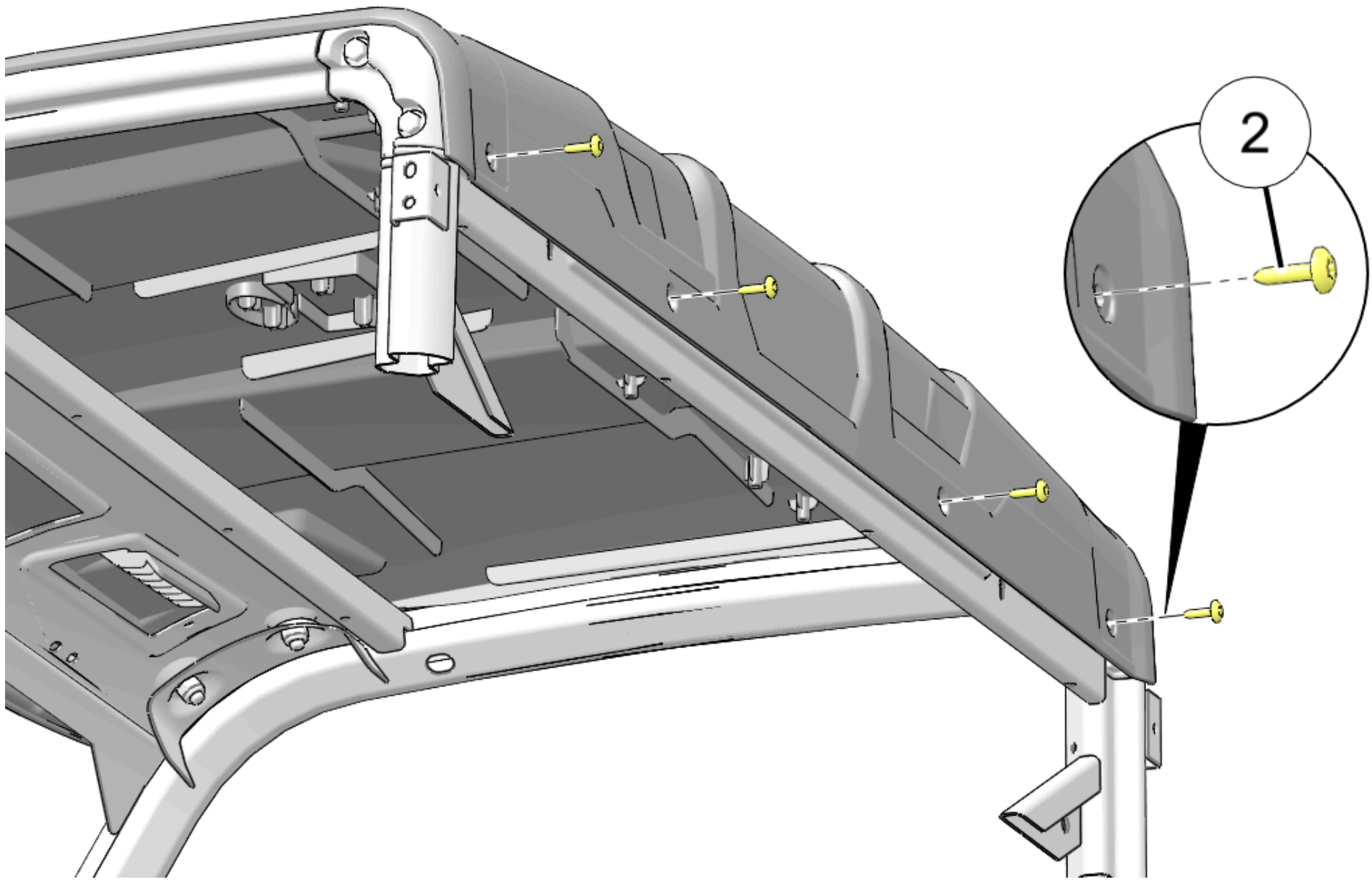

5. Torque screws (2) and (4) to specification.

TORQUE
Roof Panel Screws (2) and (4): **42 in-lbs (4.7 N·m)**

Roof Liner Preparation (if equipped)

NOTICE

Premium Roof Kits P/N 2882912, 2882913, and 2890684 only.

NOTICE

If installing one or both of the following accessories (sold separately), then modify rear roof liner (2) as described below.

Overhead Light

1. Find embossed cut-out lines, for overhead light, on topside of rear roof liner (10).

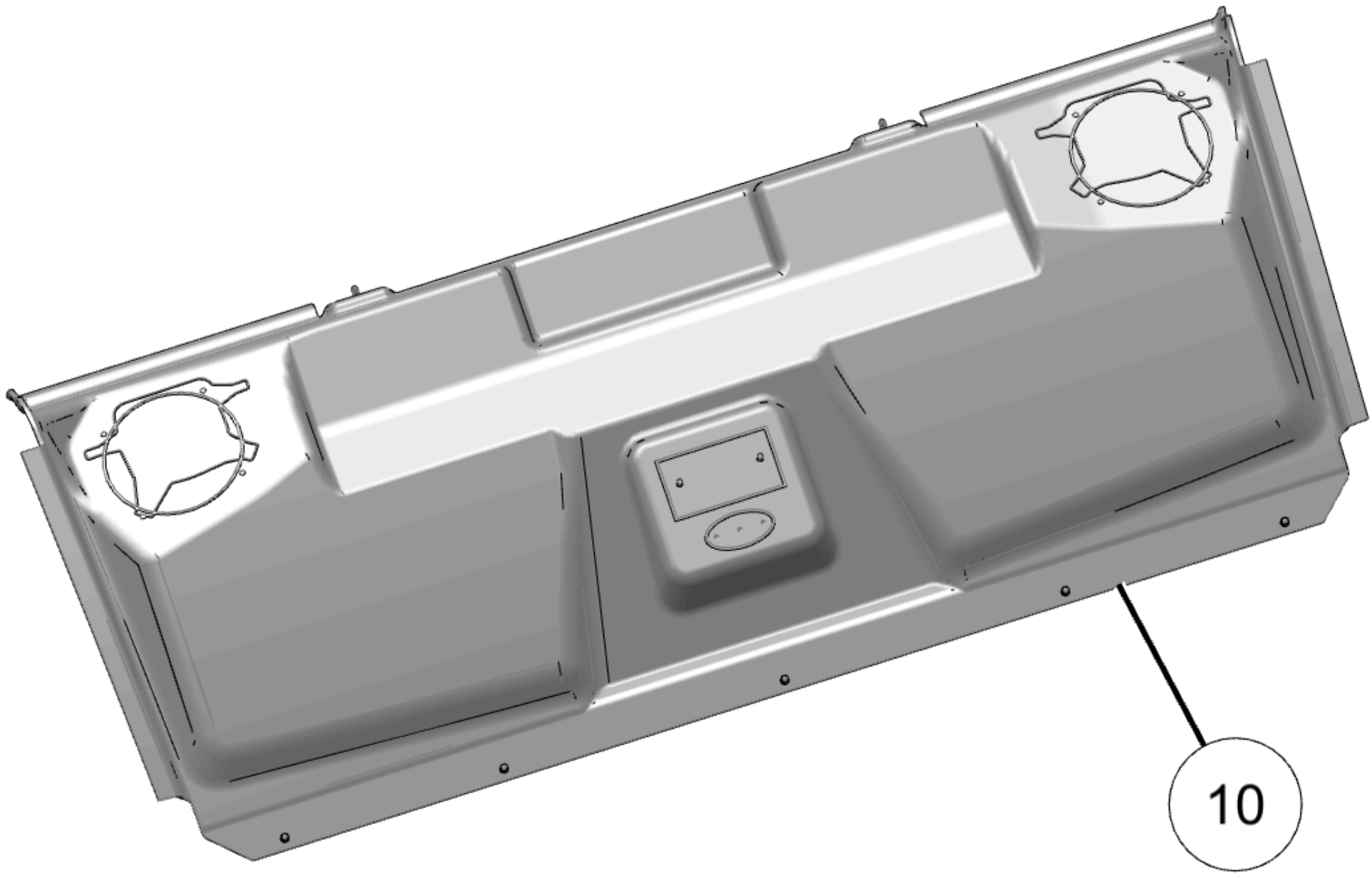

2. Cut oval opening (A) OR rectangular opening (B) into rear roof liner (10), as required, to accommodate light.

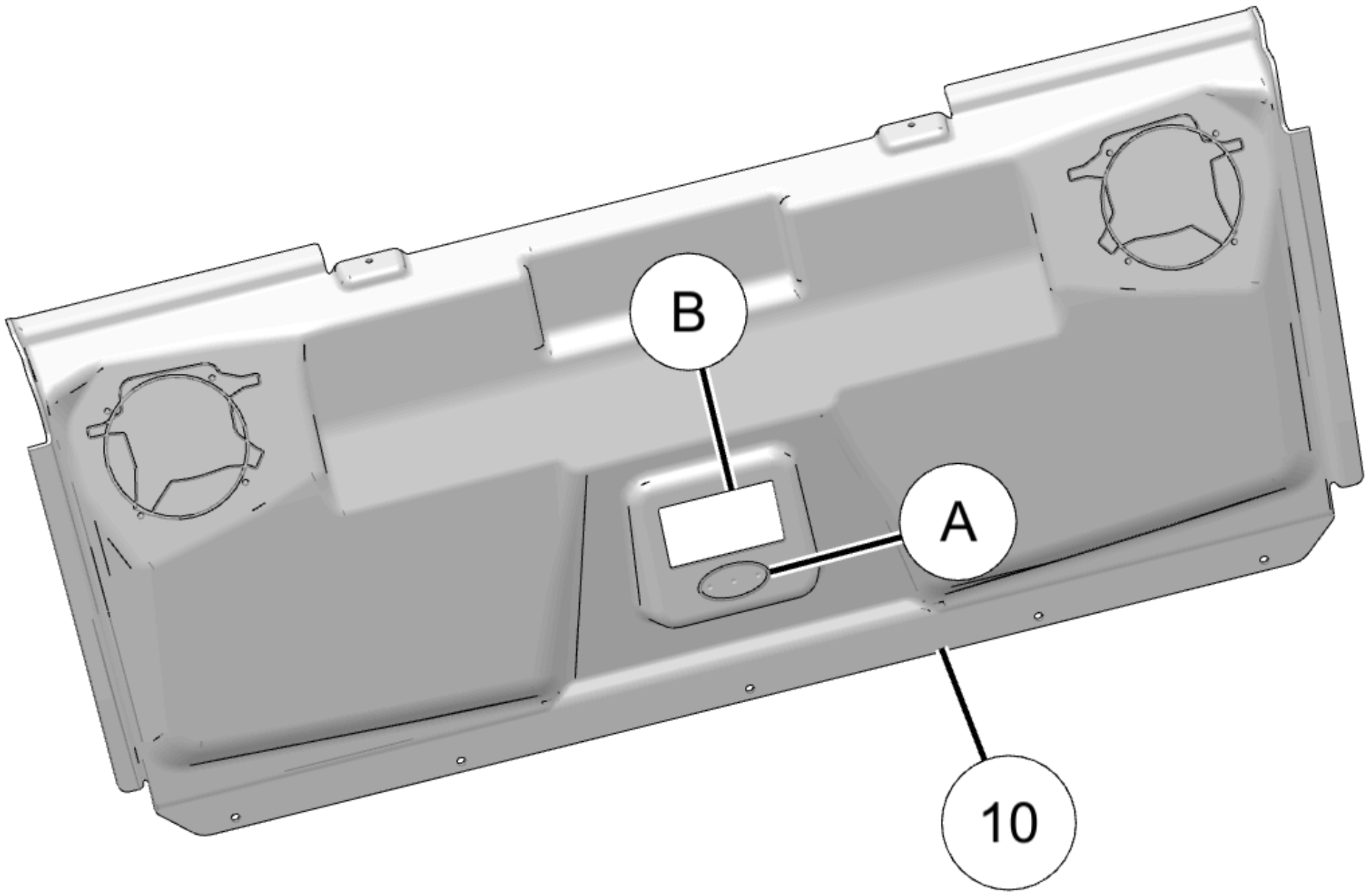

3. Install electrical harness per instructions included with accessory.

Rear Speakers

1. Find embossed cut-out lines, for speakers, on topside of rear roof liner (10).

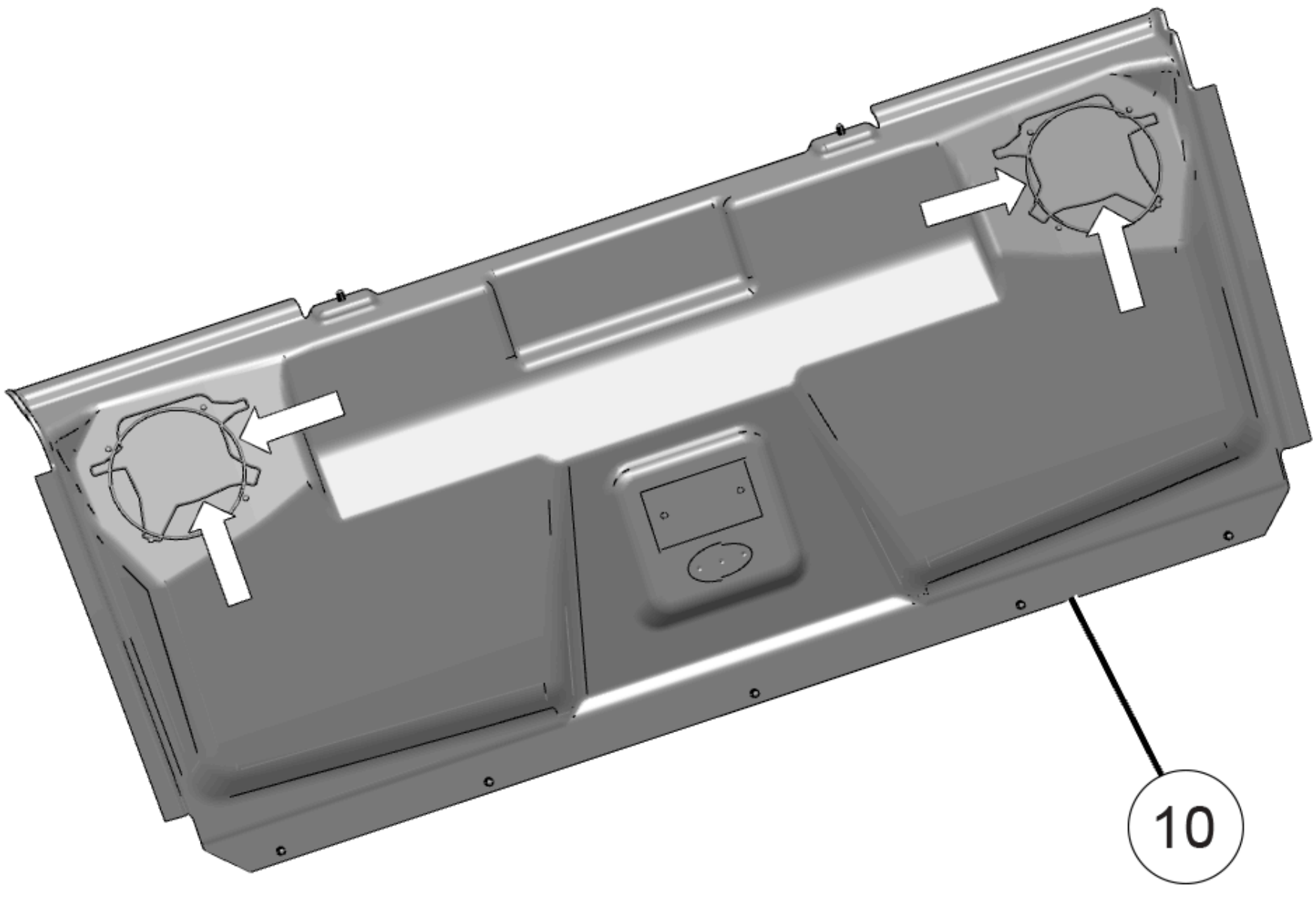

2. Cut two circular openings (C) OR, if equipped with JBL® speakers, two star-shaped openings (E), as required, to accommodate speakers.

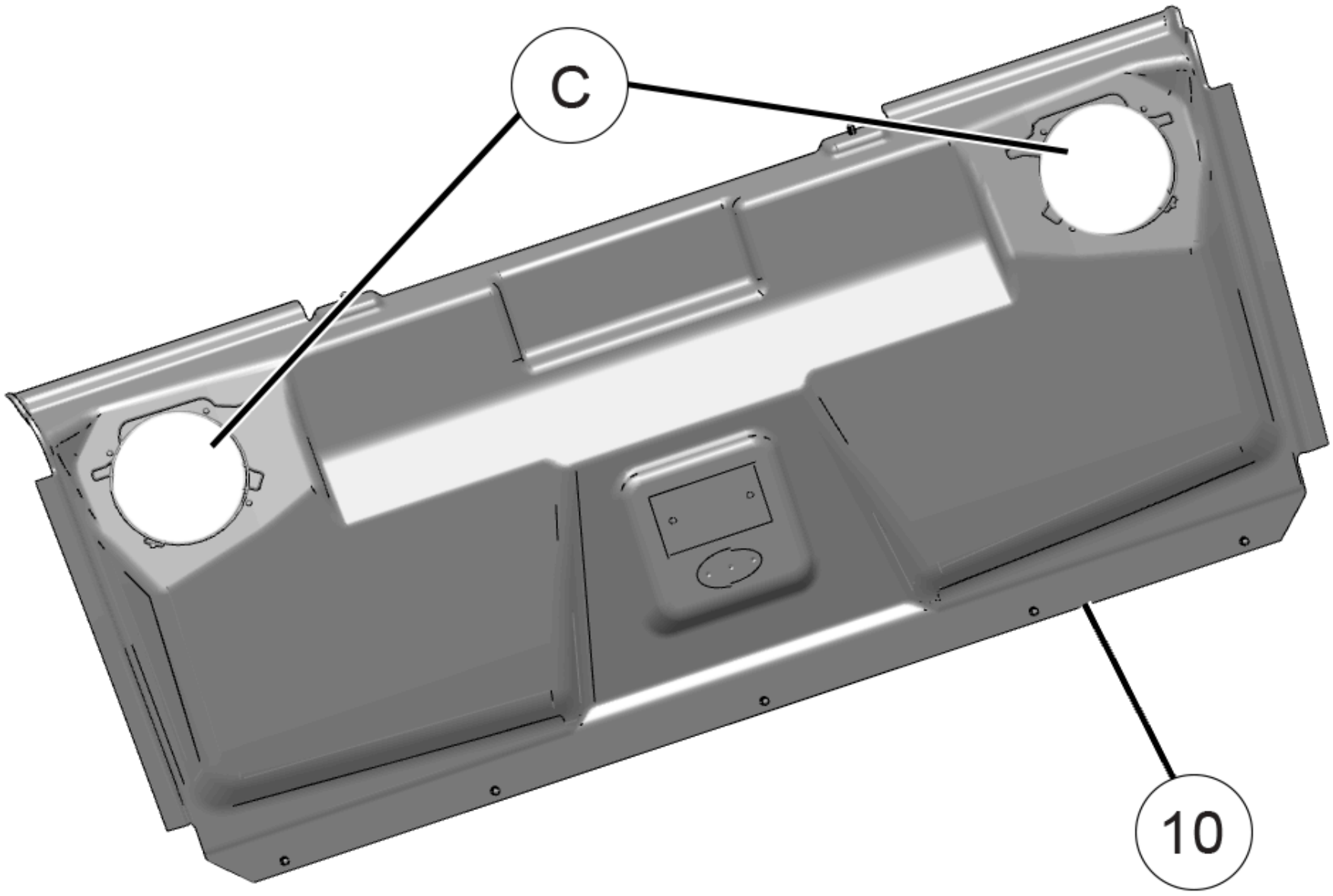

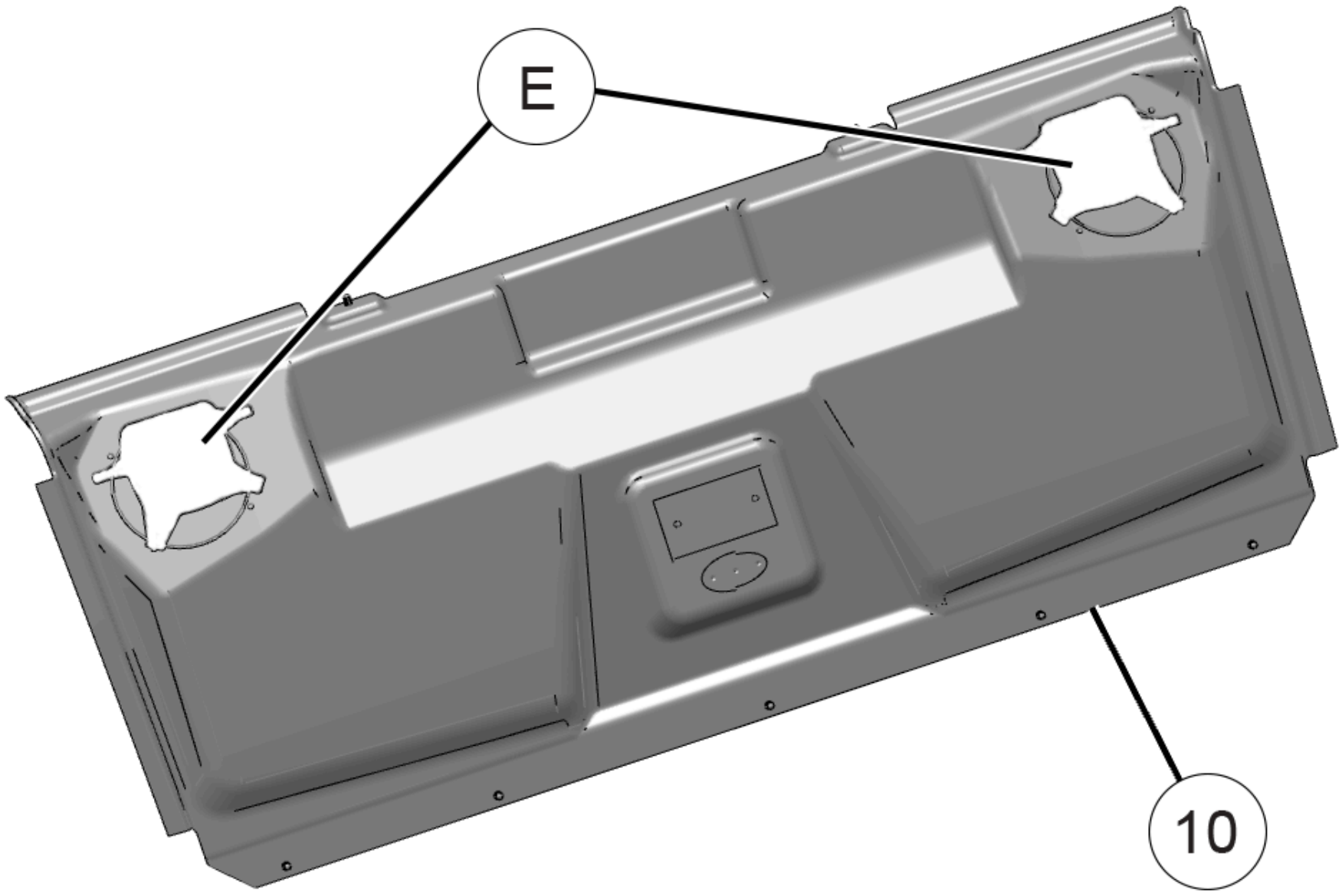

3. Open speaker fastener holes.

4. Install electrical harness per instructions included with accessory.

Roof Liner Installation

NOTICE
Premium Roof Kits P/N 2882912, 2882913, and 2890684 only.

1. Install front roof liner (9) to roof panel using two each screws (12) and washers (11).

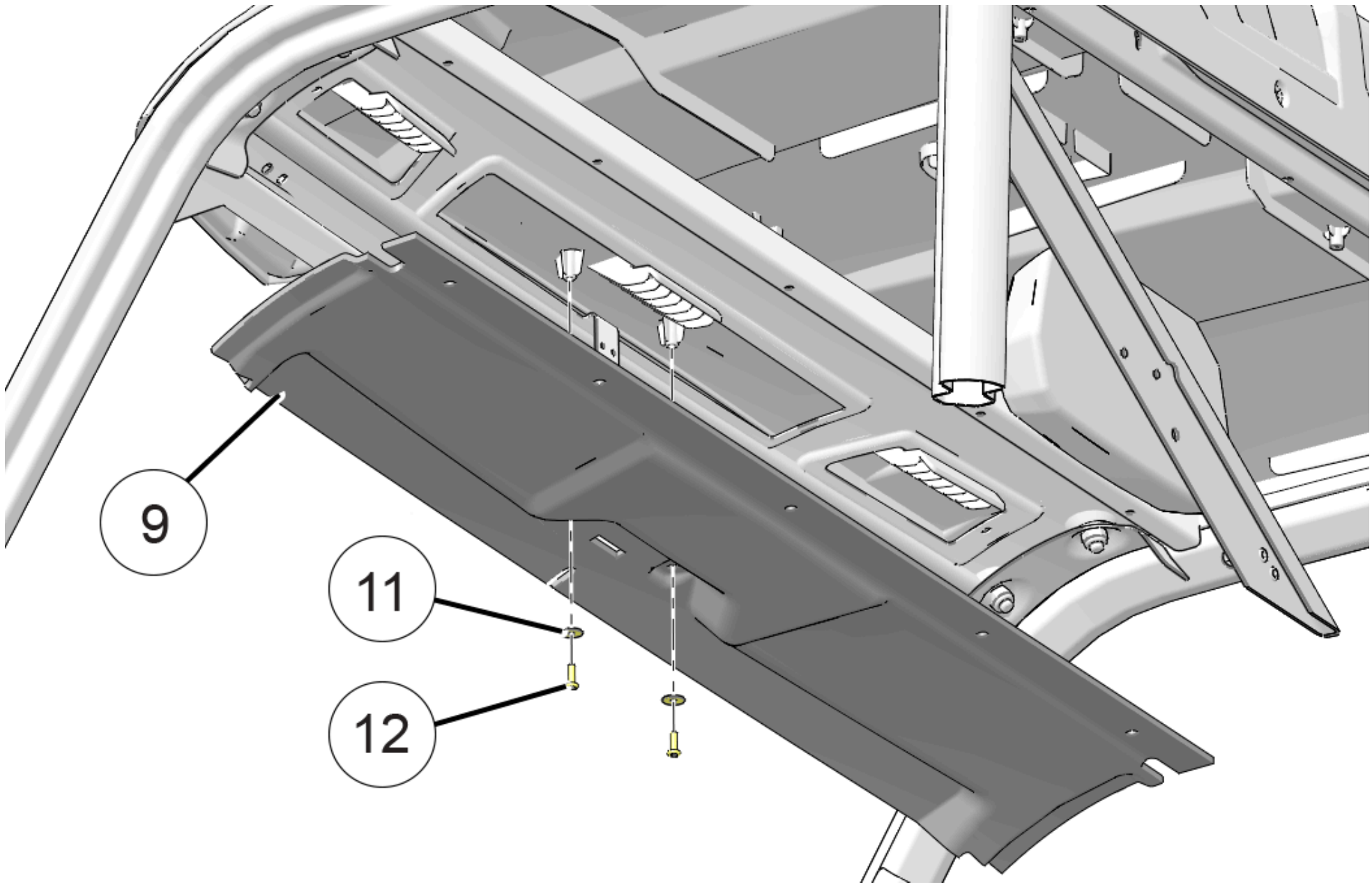

2. Install both rear segments (D) of rear roof liner (10) into roof support channel, then slowly tilt liner up, installing left and right edges of liner between ROPS and roof seal.

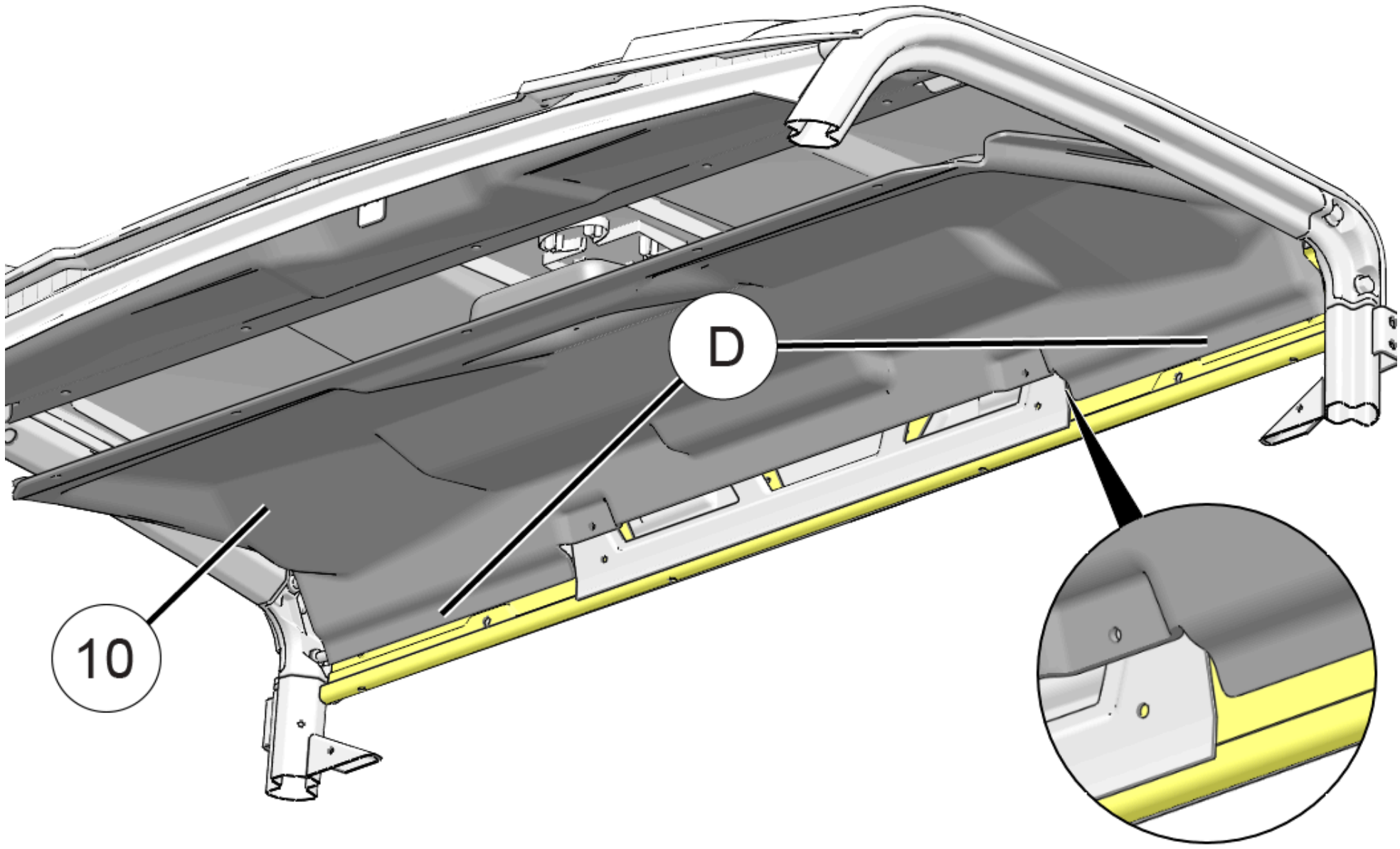

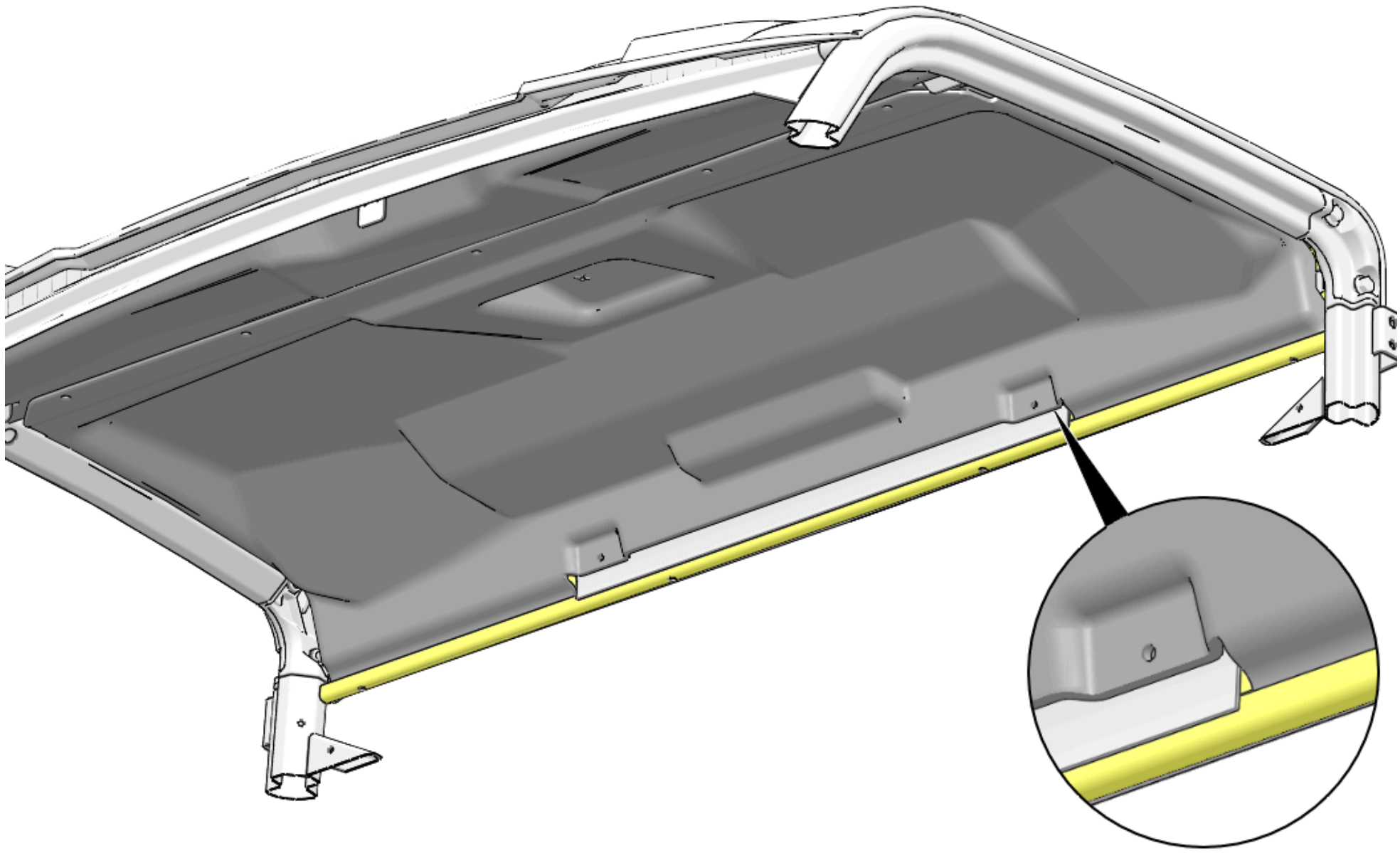

3. Install two screws (12) and two washers (11) through rear roof liner (10) and into roof.

IMPORTANT
If installing optional overhead light, then refer to instructions included with overhead light accessory kit.

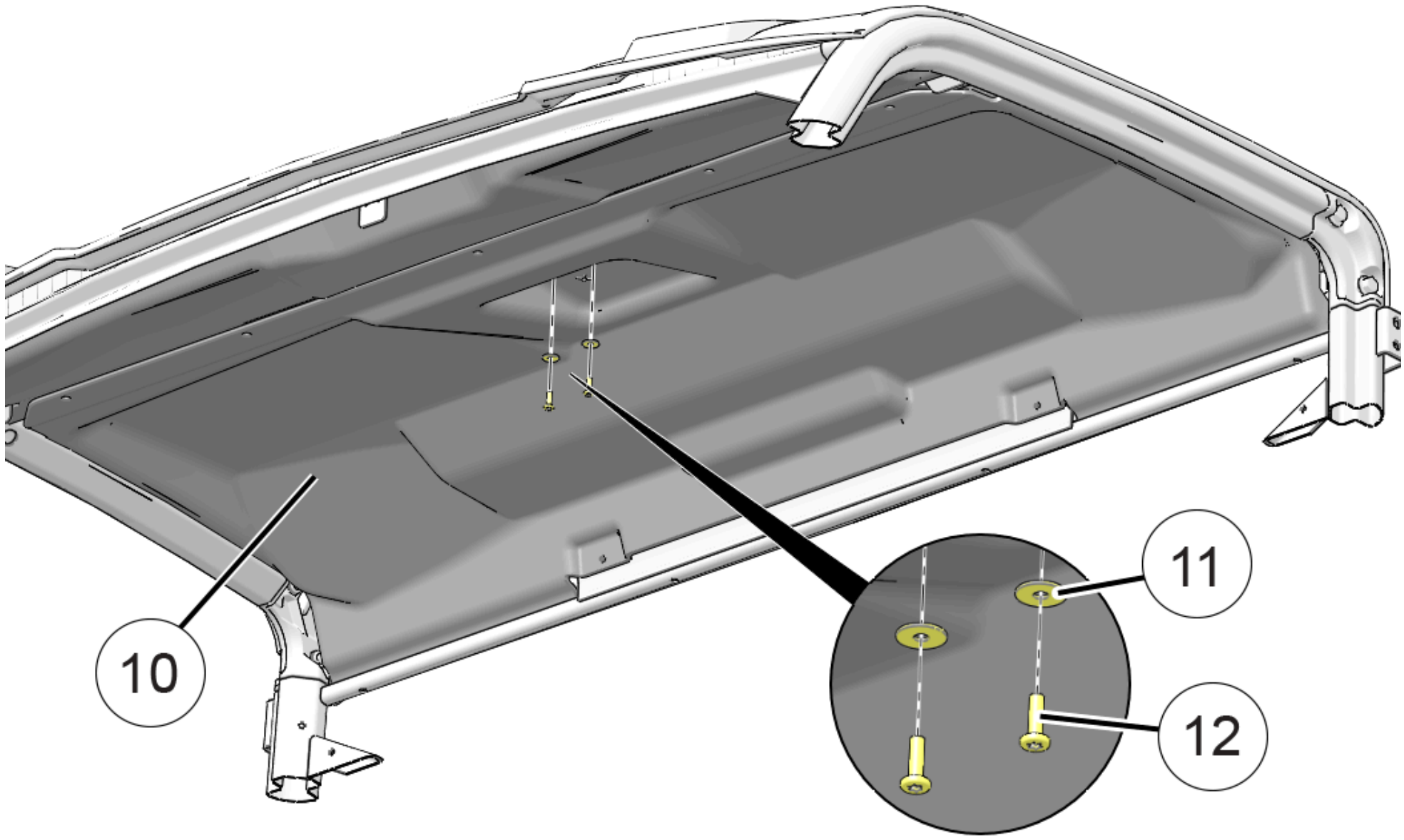

4. Attach rear roof liner (10) to roof with seven push darts (13). Install five push darts (13) into front edge of roof liner and two push darts (13) into rear edge of roof liner (10).

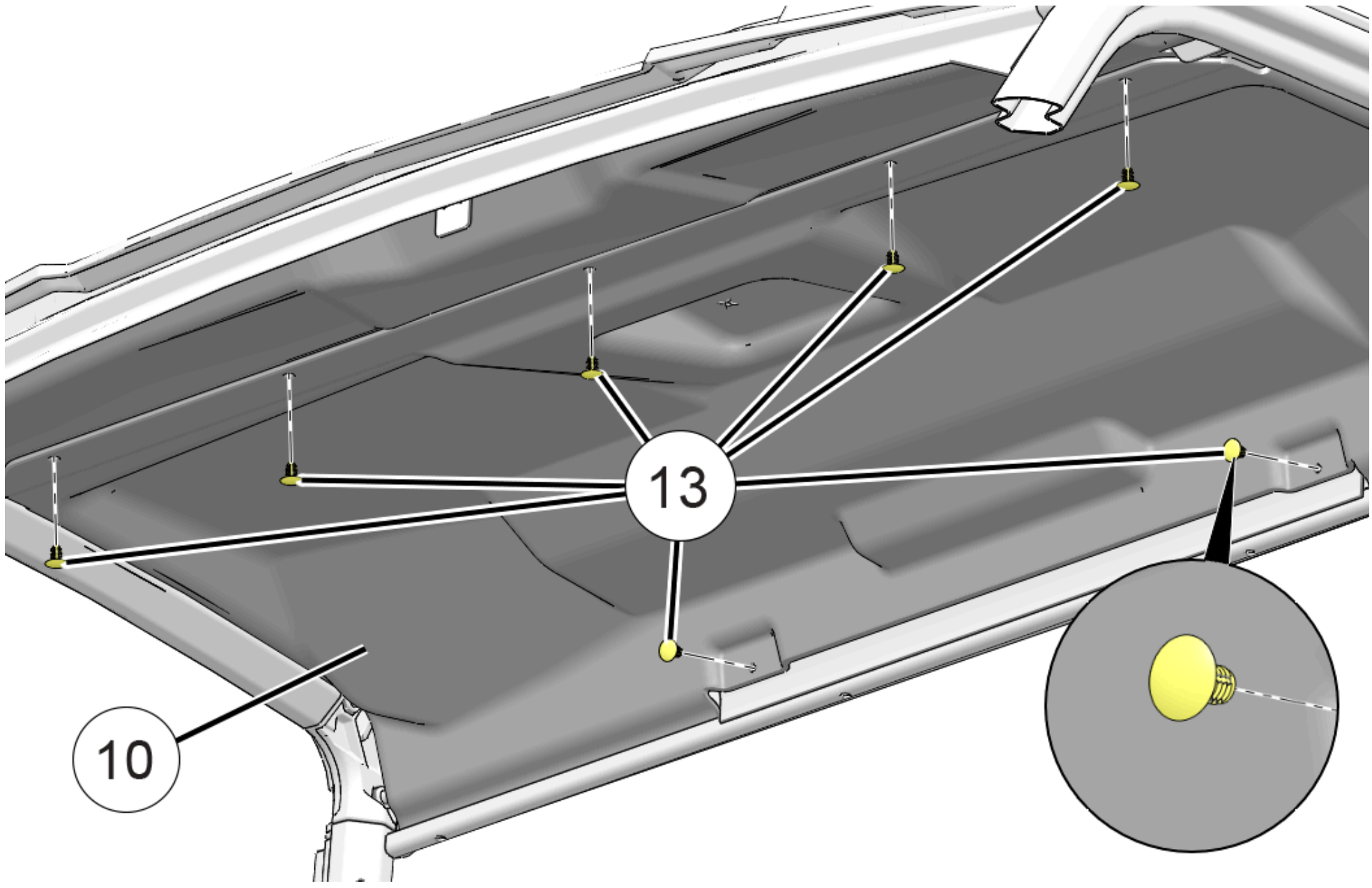

5. If installing optional rear speakers, then refer to instructions included with rear speaker accessory kit.

Decal Installation

1. Decal application.

IMPORTANT

Decals required per ANSI/ROHVA standards.

MY19 and older *RANGER* XP® 900

All required decals are applied to vehicle from factory. Decals (14), (15), and (16) are not used.

MY18 and newer *RANGER* XP® 1000 and PRO XD™ Models

Apply "Be Prepared/Drive Responsibly" decal (14), "Require Proper Use/Do Your Part" decal (15), and "Payload" decal (16) to front liner (9) as shown.

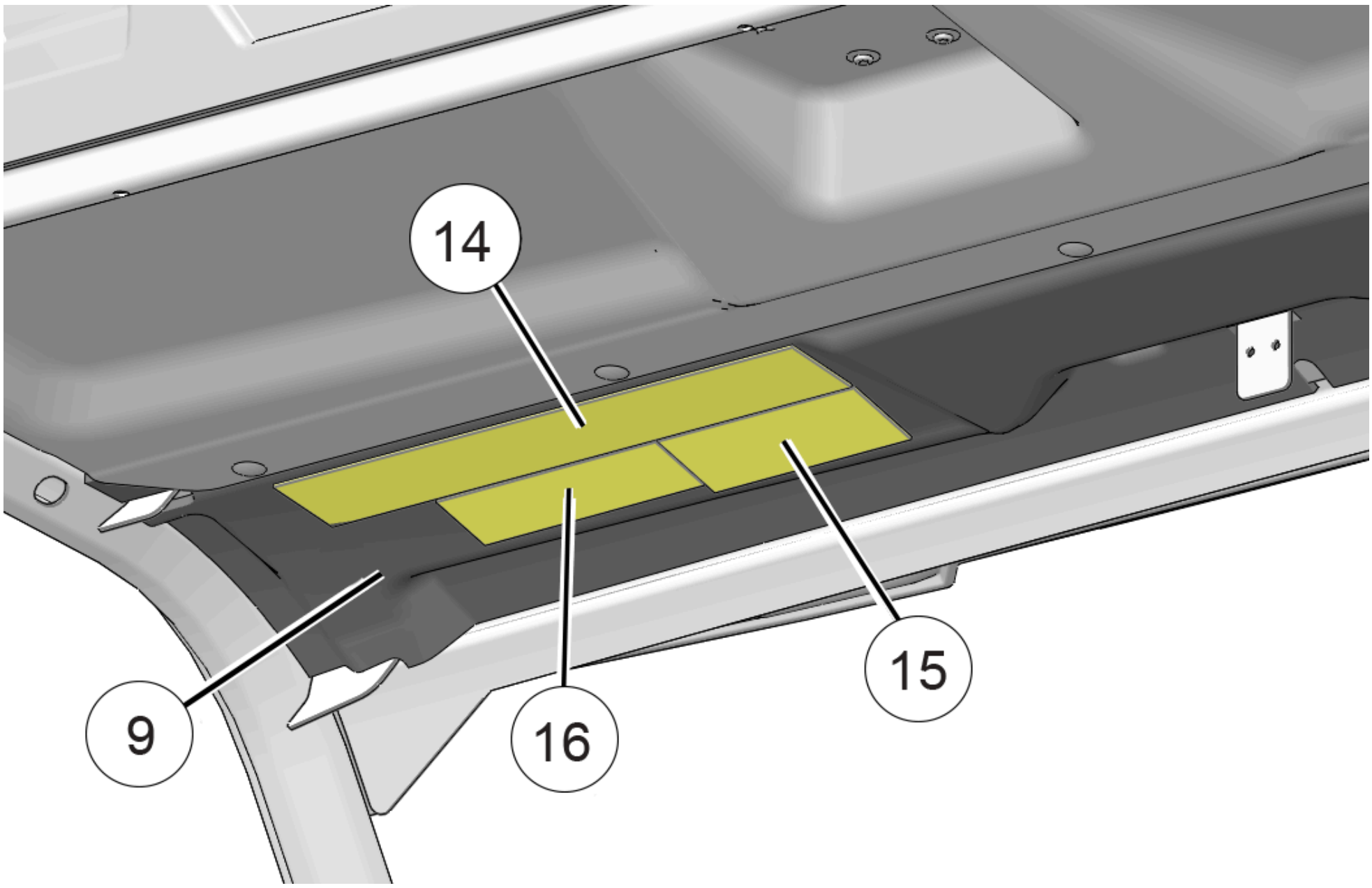

© 2026 Polaris Inc.